RoHS Compliant

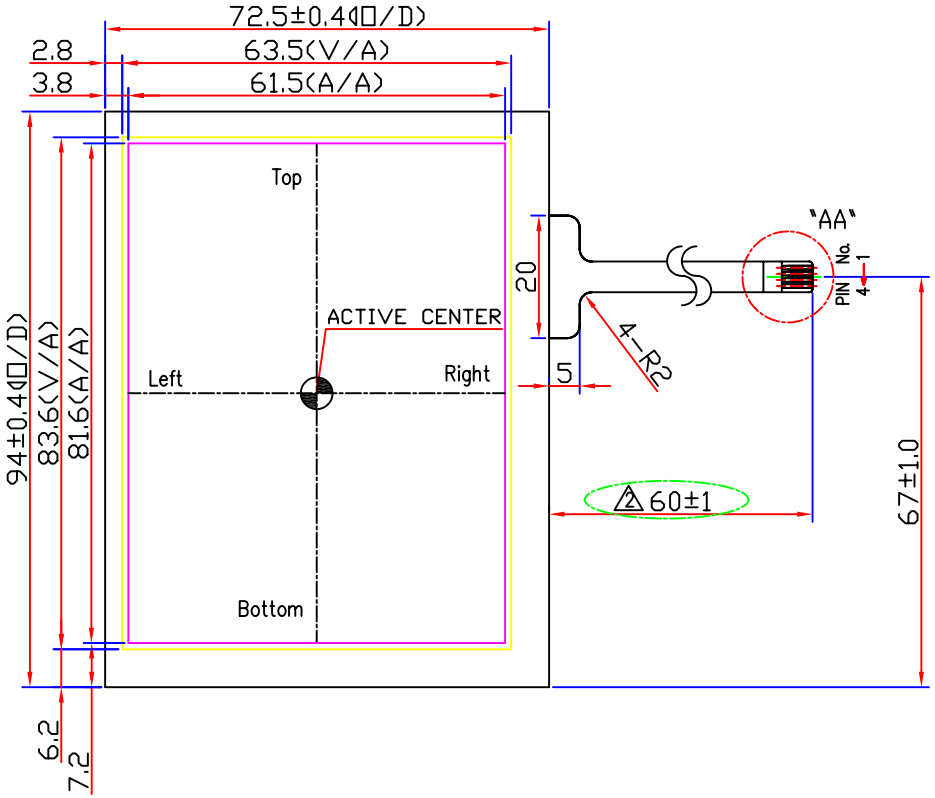

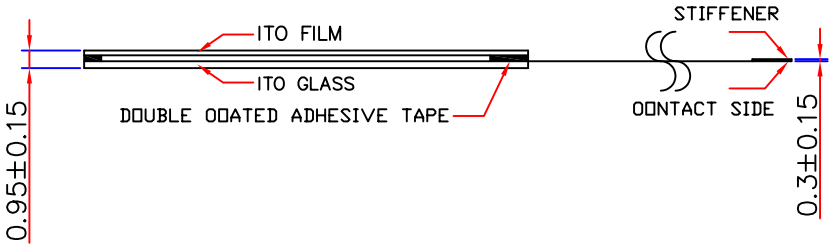

REMARK

1. Glass Thk:0.7mm
2. Film Type: Non_Glare
3. Total Thk:0.95±0.15mm
4. Linearity:±1.5 or less
5. Transmittance:80% or more
6. Resistance
   200<Glass(Y)<900 ohm
   200<Film(X)<900 ohm
7. Connector:FPC(Ni+Au)

CIRCUIT DIAGRAM

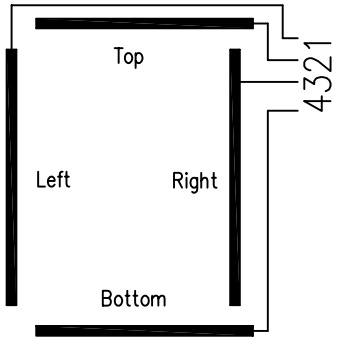

SIGNAL ASSIGNMENT

Pin No	Signal
1	Left
2	Top
3	Right
4	Bottom

Detail "AA"

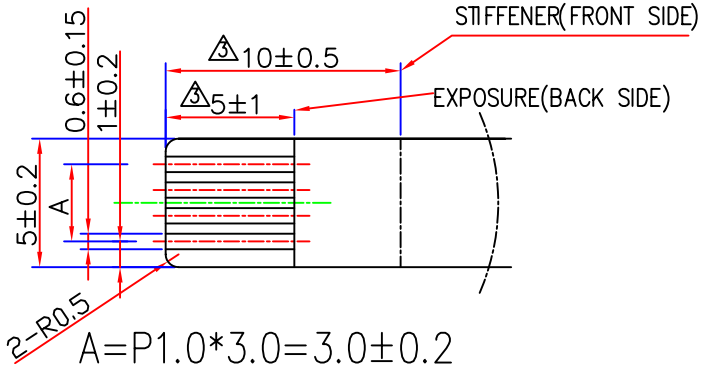

A=P1.0*3.0=3.0±0.2

REV.No.	REVISED	DATE	DRAWN	CHECKED	APPROVED
3	△3 8 ±1mm → 10 ±1mm 4 ±1mm → 5 ±1mm	06.02.10	K.B.KIM		
2	△2 43 —> 60mm	05.05.03	B.J.LEE		J.W.AHN
1	△1 10 ±1mm →8 ±1mm 5 ±1mm →4 ±1mm	05.02.23	J.H.LEE	B.J.LEE	J.W.AHN
0	NEW DRAW	05.02.21	J.H.LEE	B.J.LEE	J.W.AHN

APPROVE		UNIT	mm	PROJECTION
CHECK		SCALE	NONE	
DESIGN				
DRAW				

HanTouchUSA
Touch Screen Specialists

DRAWING NO. H5040A-NCOFD62 REV.

DESCRIPTION 4.0TOUCH PANEL

SHEET 1/1

NOTE: The HantouchUSA Incoming Inspection Standard is part of this drawing. This quality and performance document can be viewed at: www.hantouchUSA.com, under Incoming Inspection Standards.

Web-Site @ www.hantouchusa.com